Rider 4

GREENVALLEY

Cod. 160504

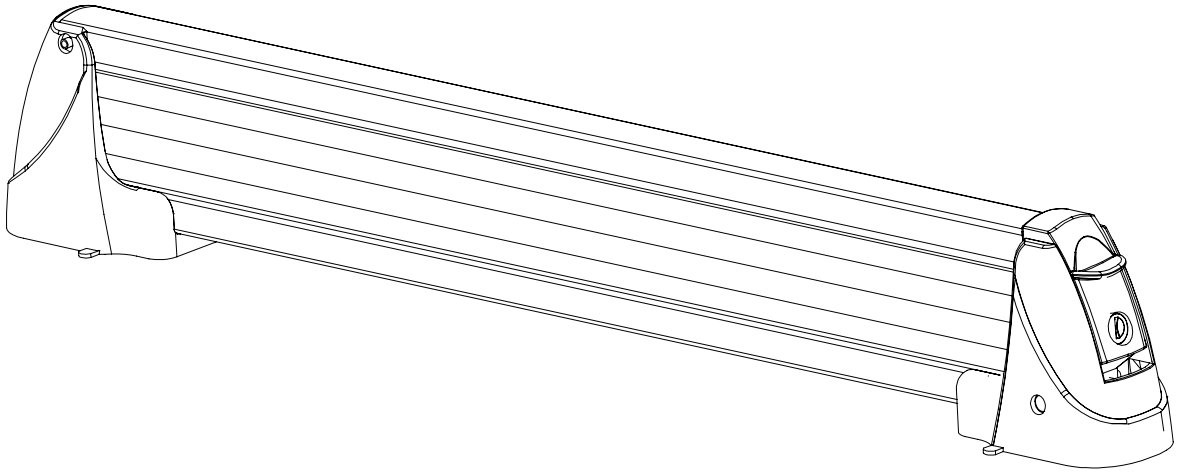

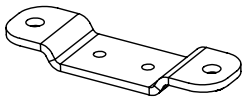

X4
SR2014-029

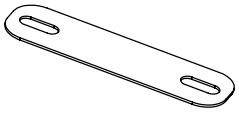

X4
FX-004

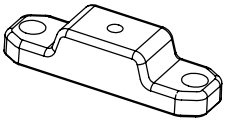

X4
SR2014-028

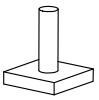

X4
5116801

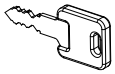

X2

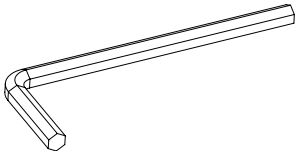

X1
346600151

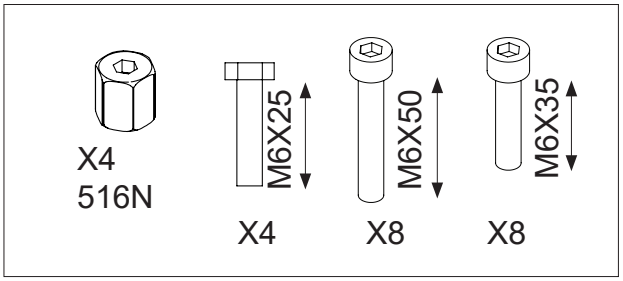

X4
516N

X4 X8 X8





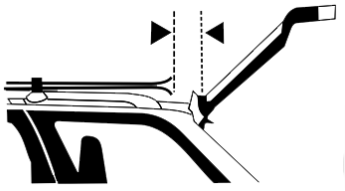









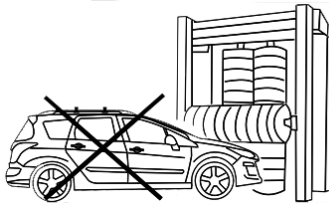

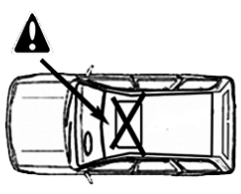

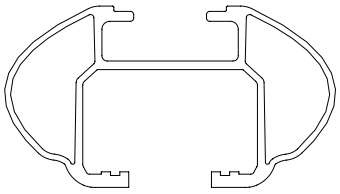

Aluminium Bars Pag 2->3

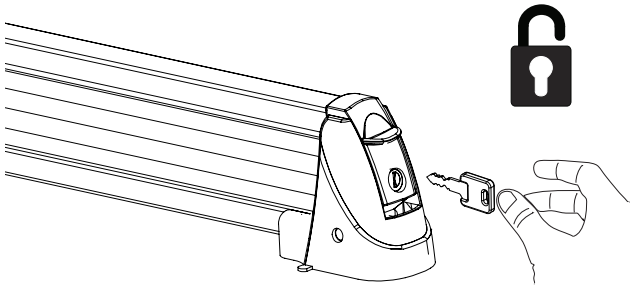

x2

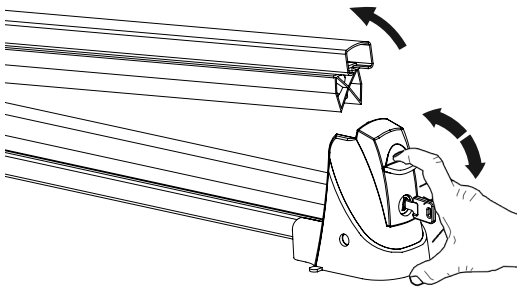

x2

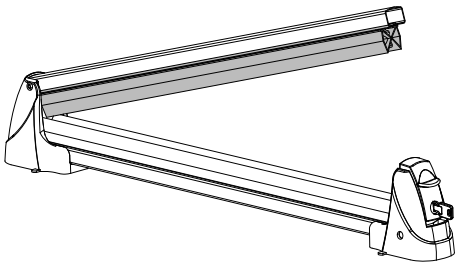

x2

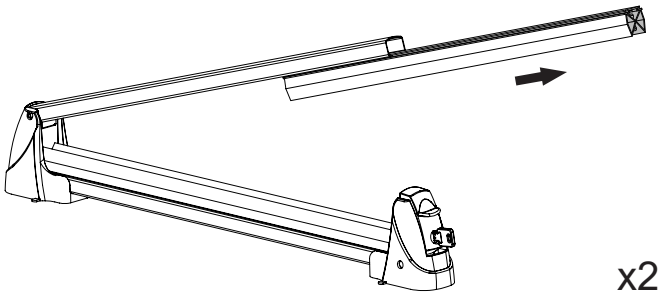

x2

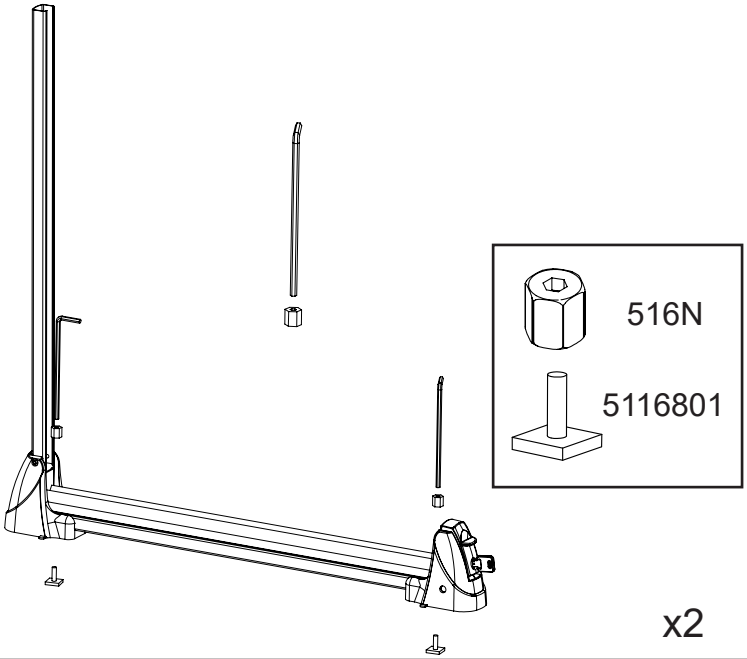

x2

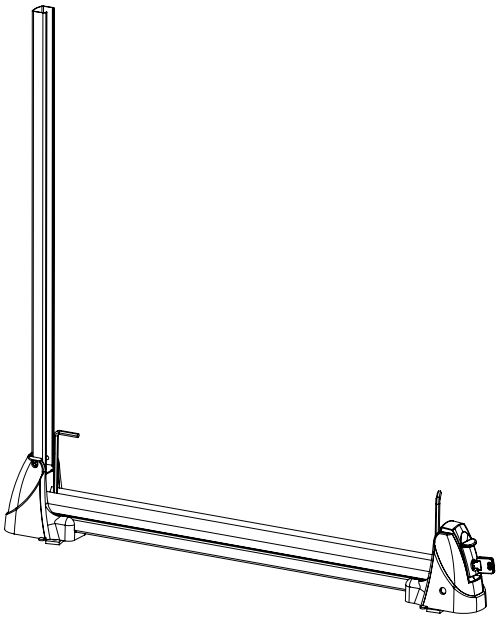

x2

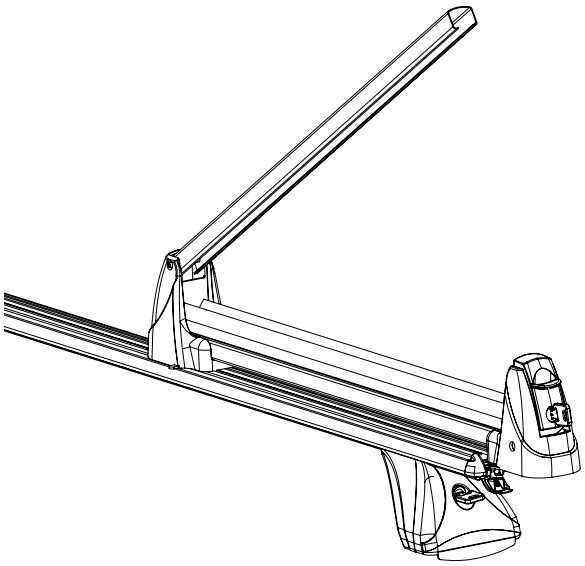

x2

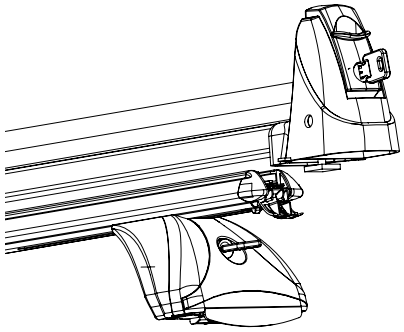

x2

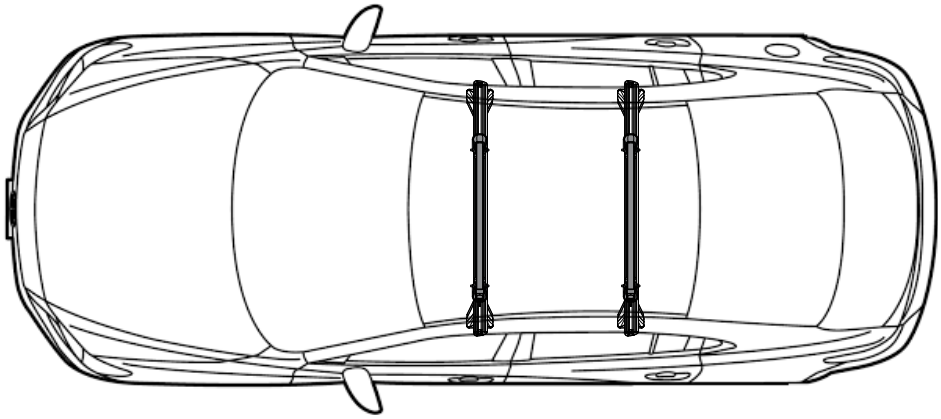

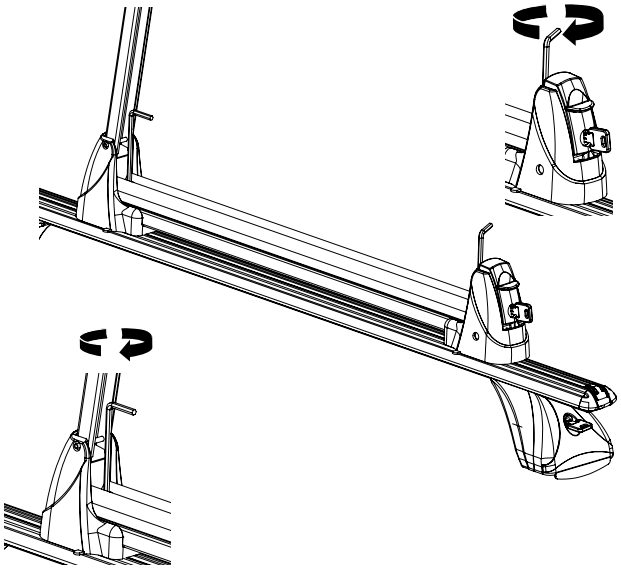

x2

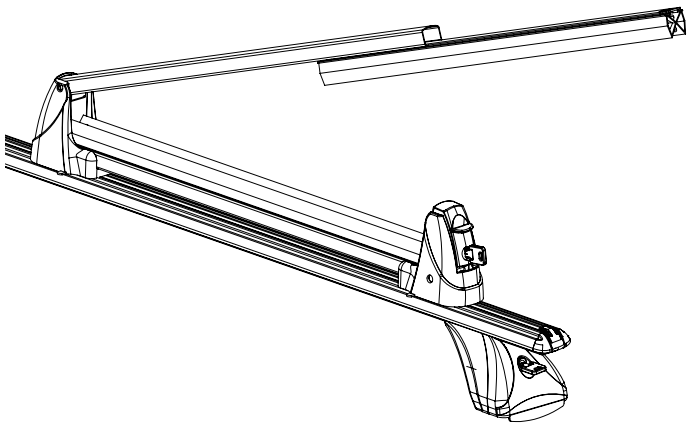

x2

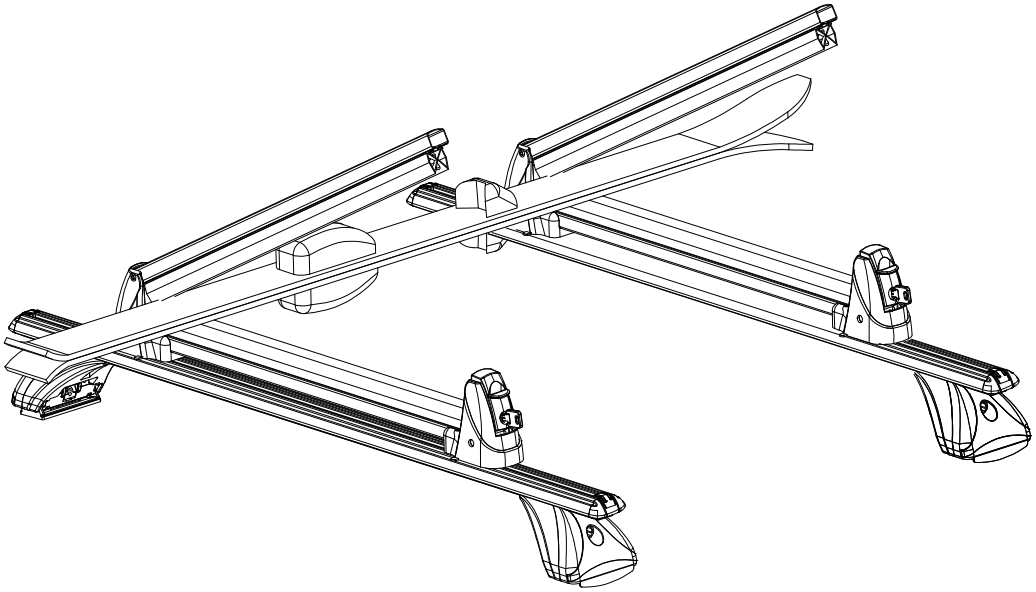

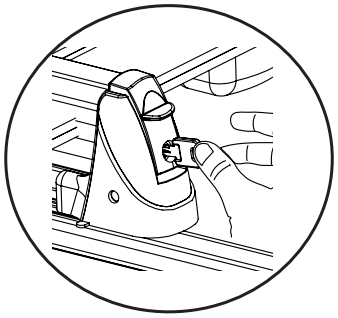



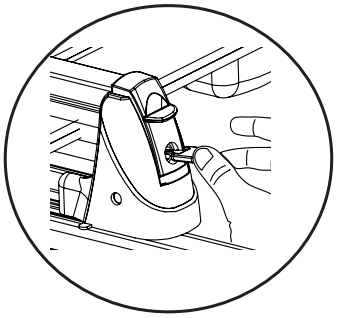



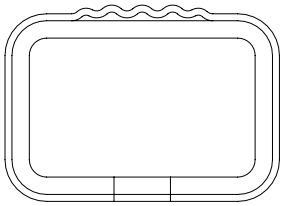

Steel Bars Pag 4->5

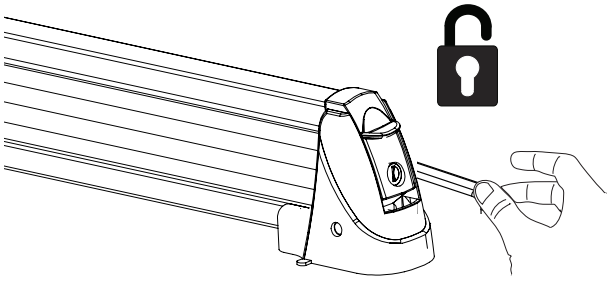

x2

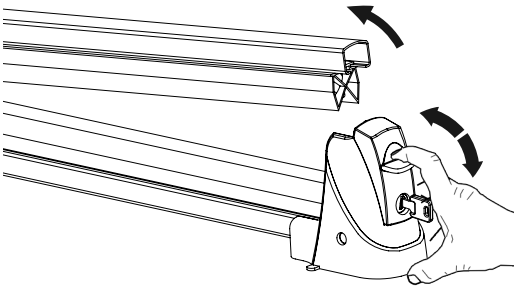

x2

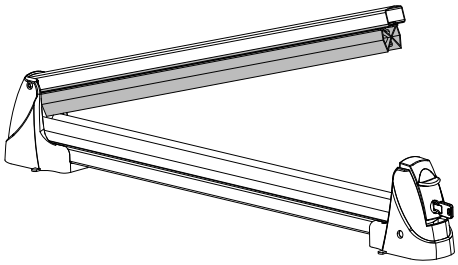

x2

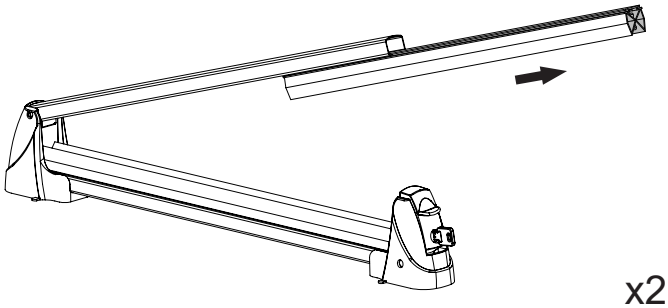

x2

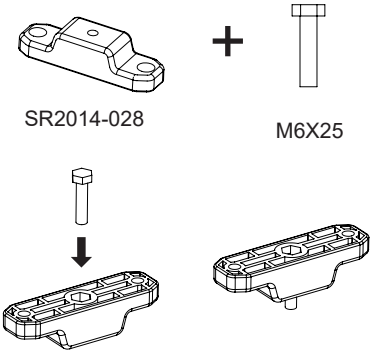

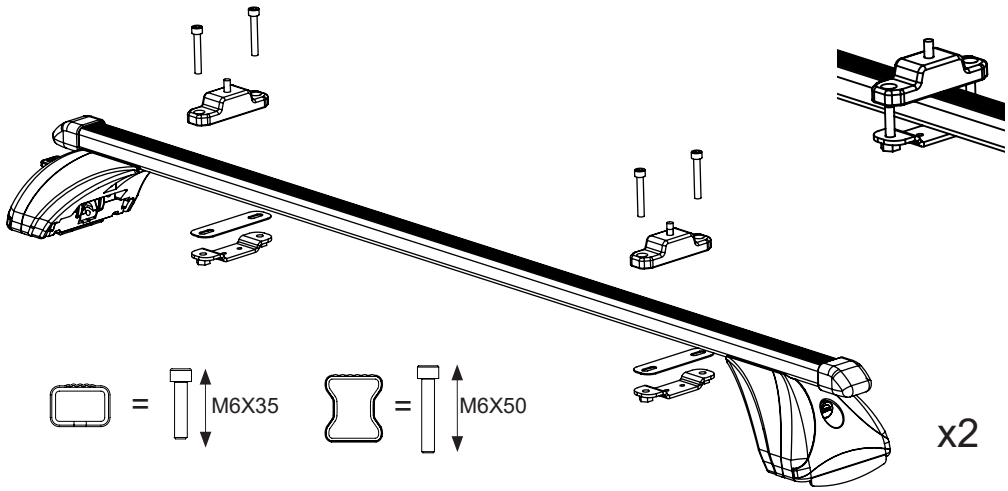

x2

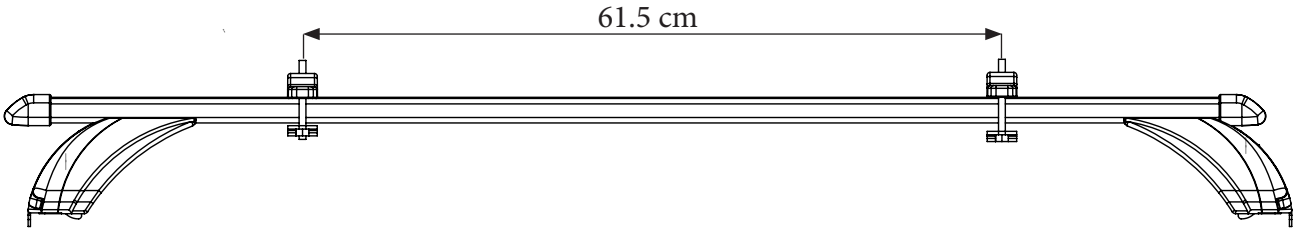

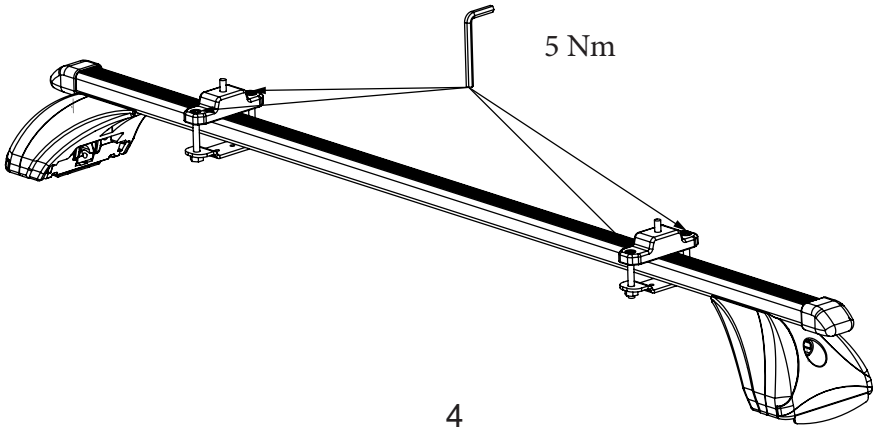

x2

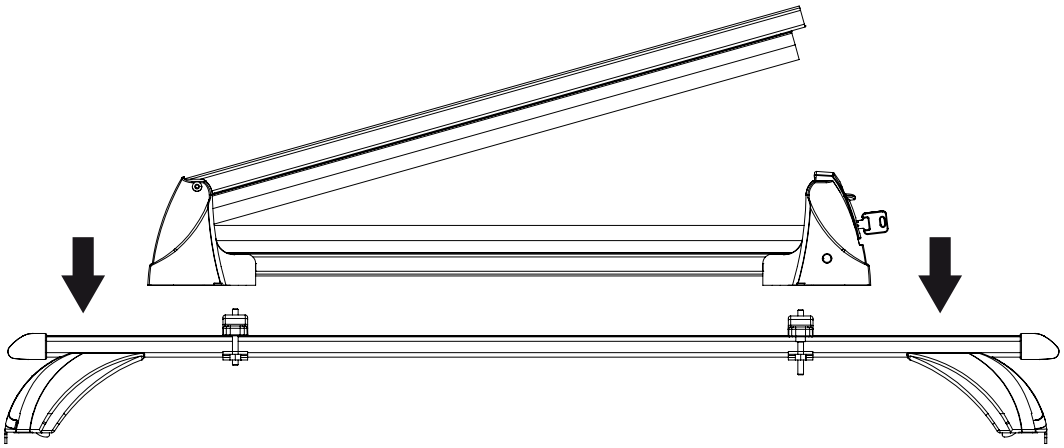

x2

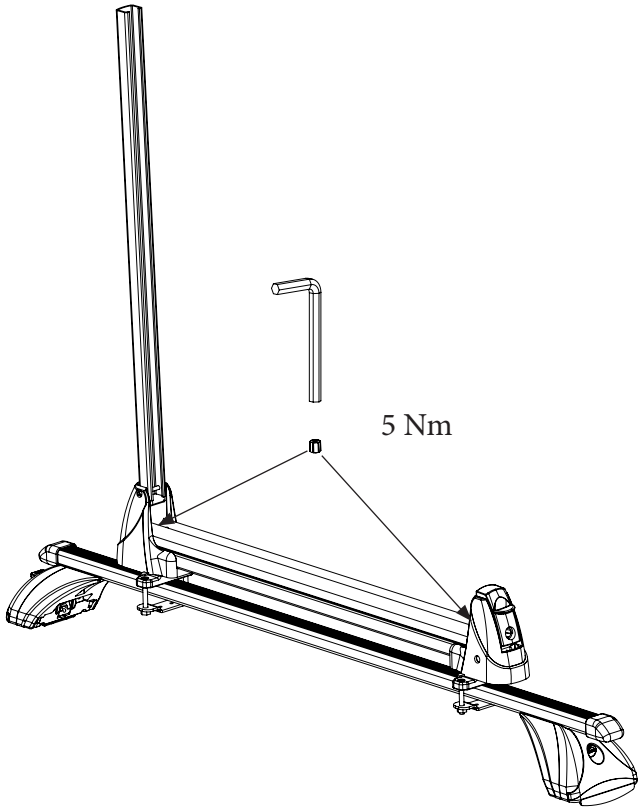

x2

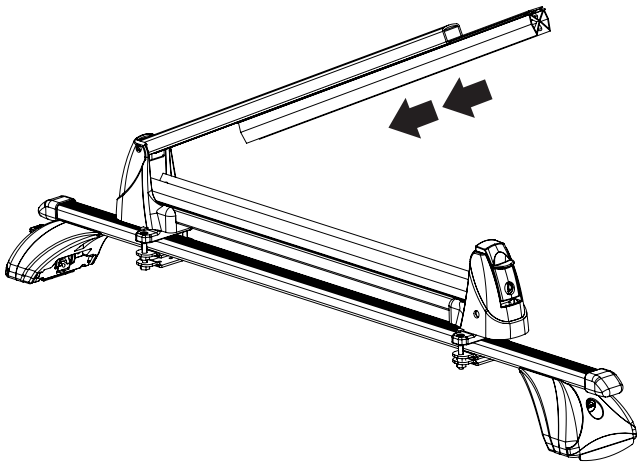

x2

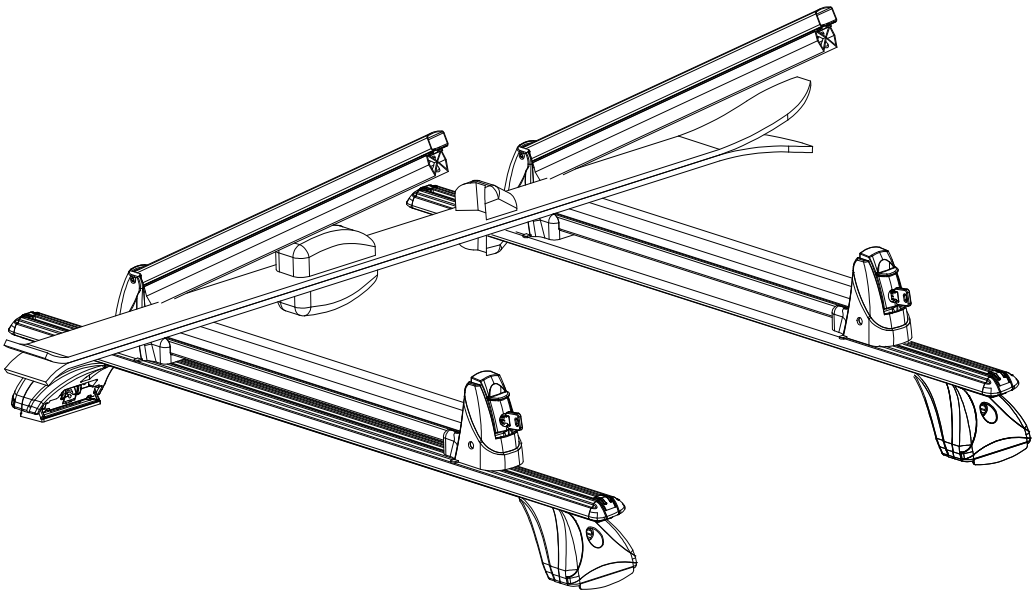

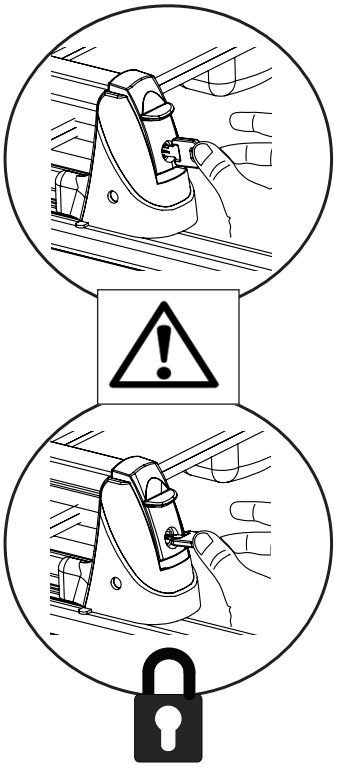



GVI srl , Via Torino 101 12045 Fossano (CN) - tecnico@aurilisitalia.com - info@aurilisitalia.com
Tel +39 0172694590 Made in ITALY